GROCO

Φ8x30mm 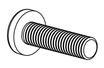 A*2	Φ8x50mm 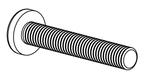 B*2	Φ8x40mm 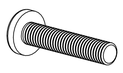 C*4	Φ8x80mm 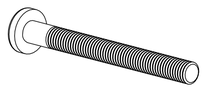 D*4	Φ6x135mm 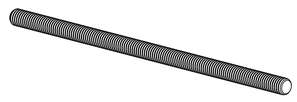 E*2
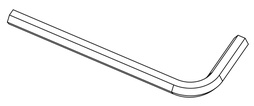 F*1	G*1	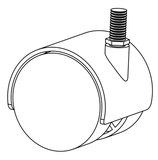 H*4	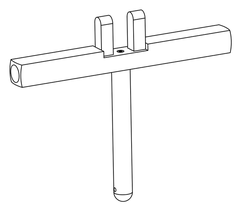 I*1	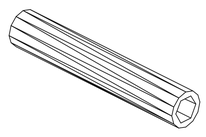 J*1

1

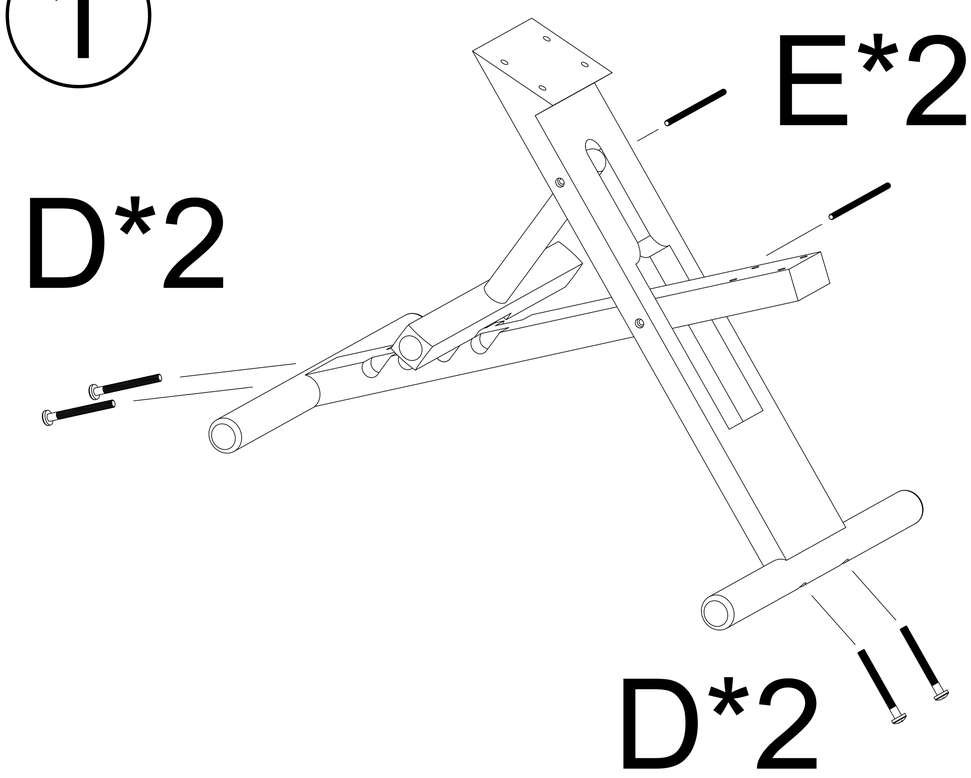

2

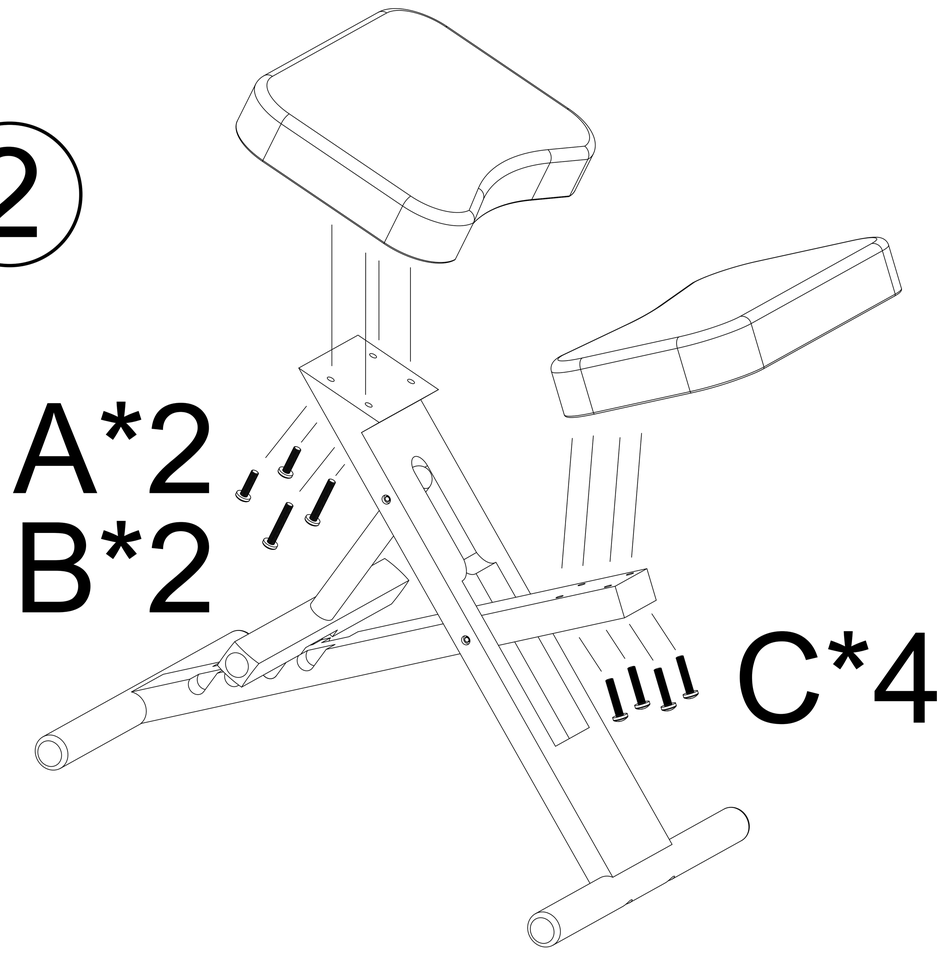

3

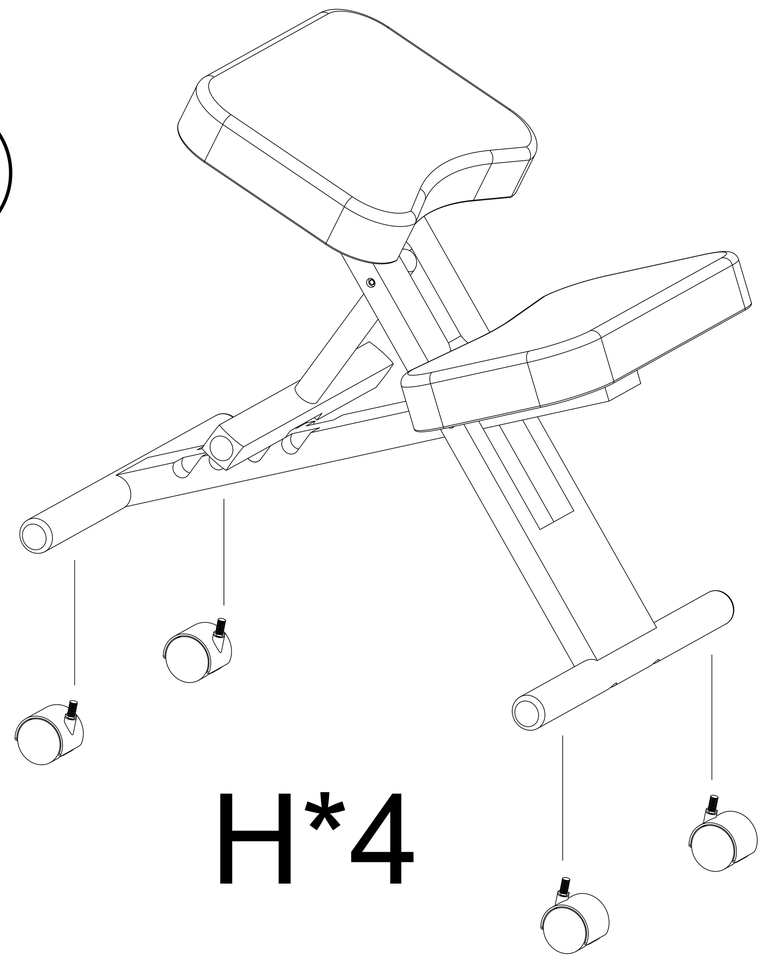
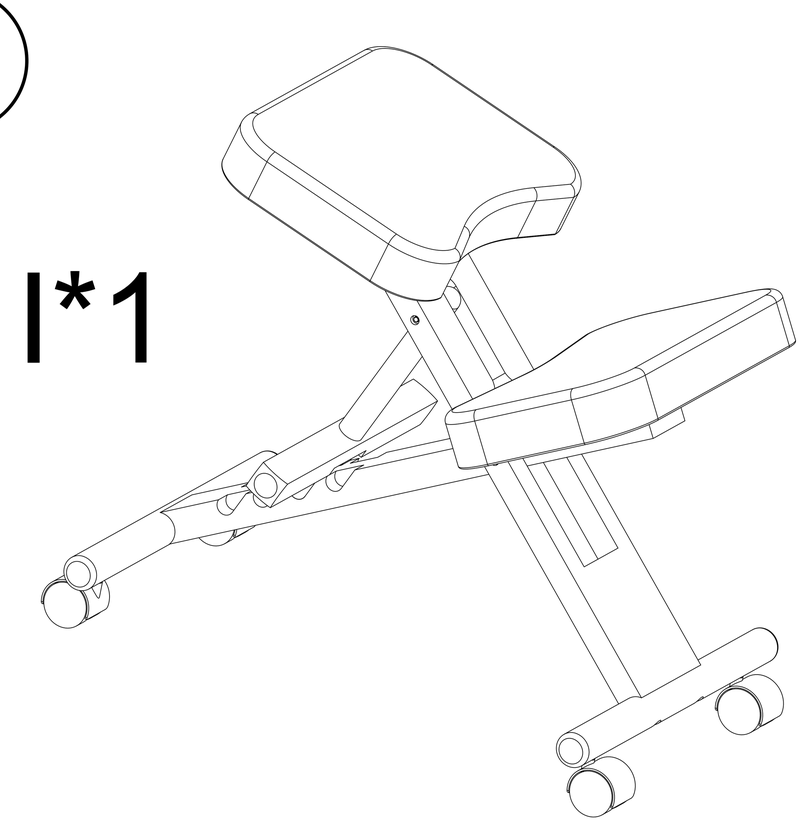
4