NOVARA

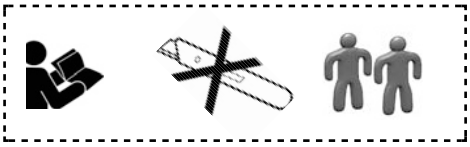

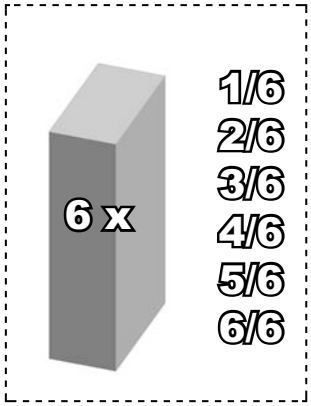

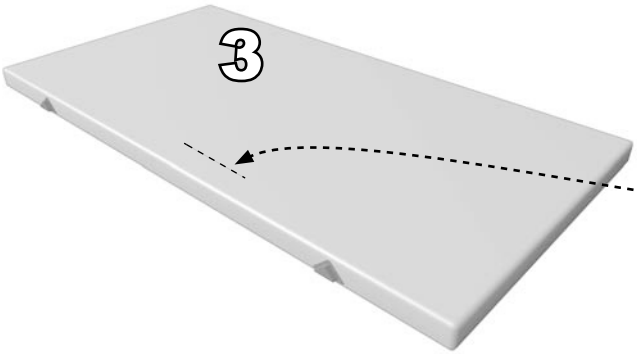

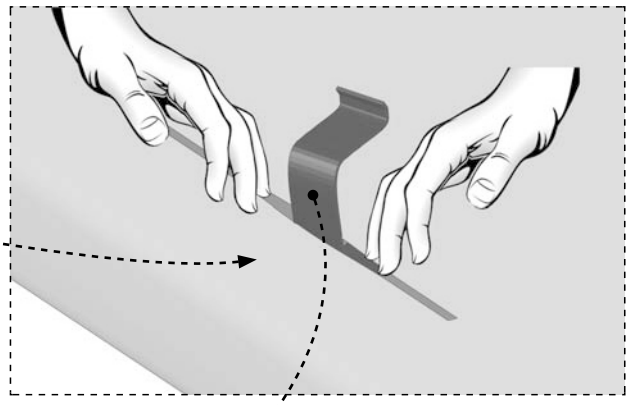

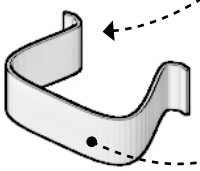

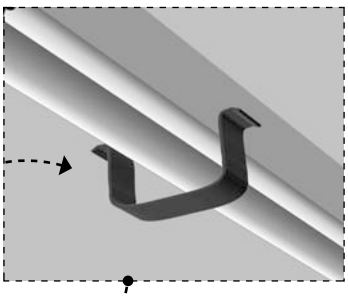

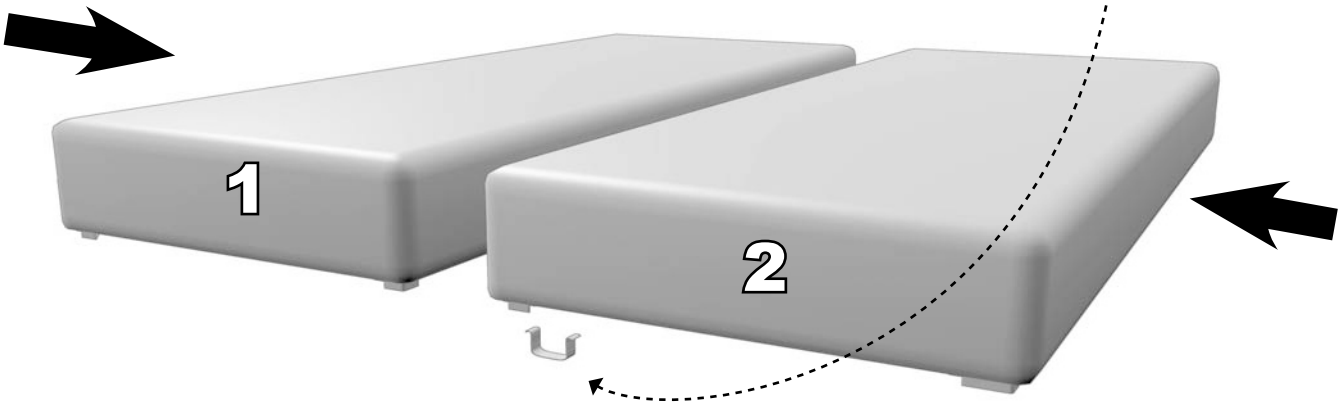
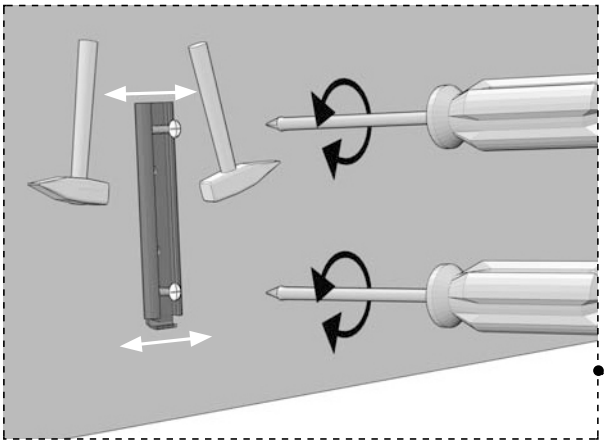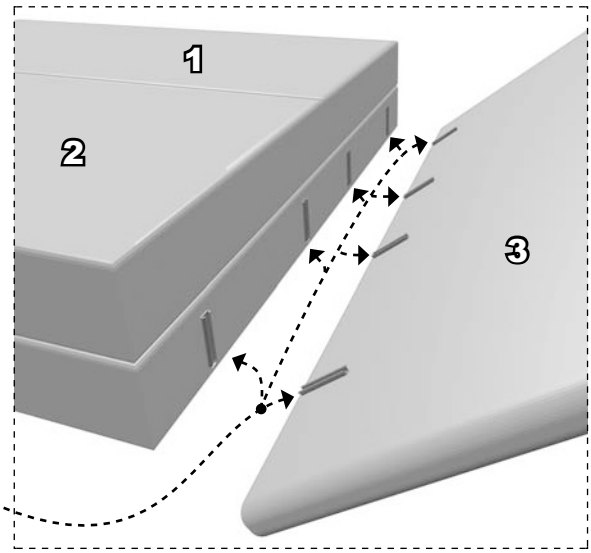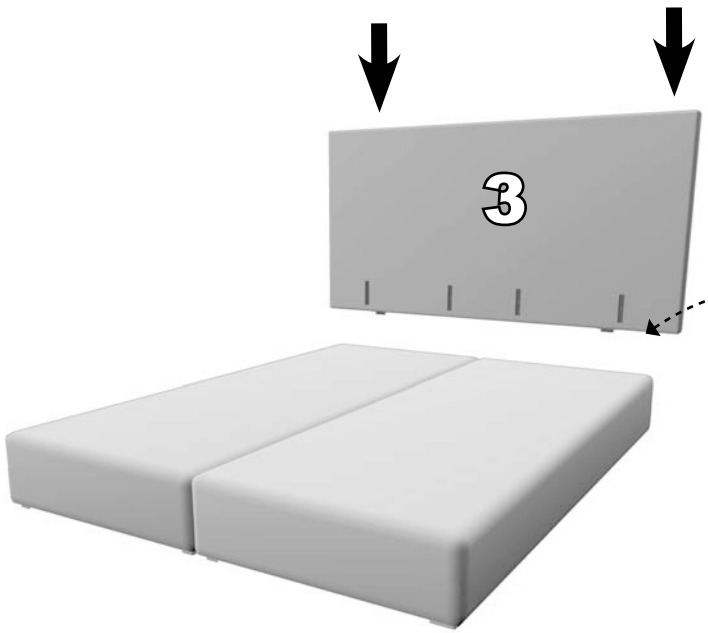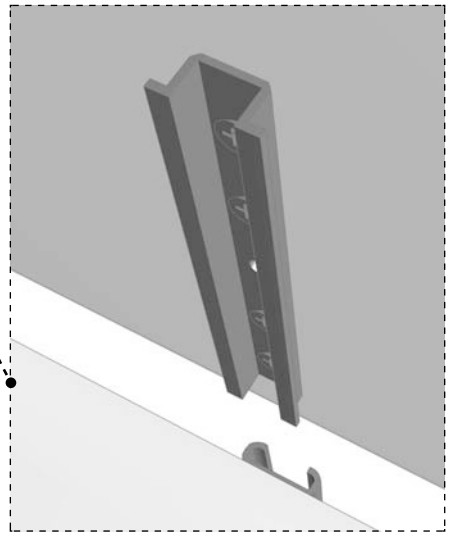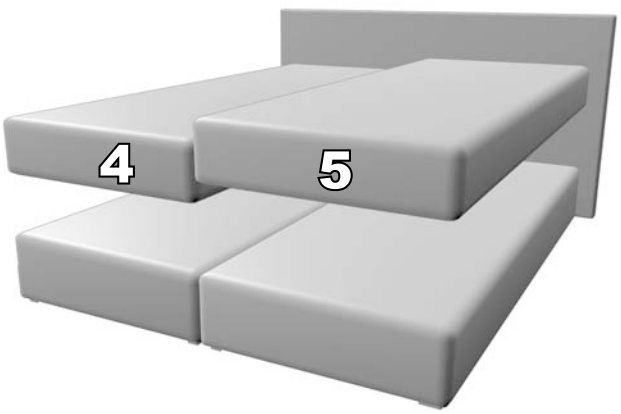
NOVARA